MOULD AREA

BOX EJECTOR

Maquinaria Boix e Hijos, S.L.
Poligono «La Granadina» Manzana 1, Calle 5
03340 Albatera (Alicante) Spain
(+34) 965 489022
(+34) 965 489037
www.grupoboix.com
sales@grupoboix.com

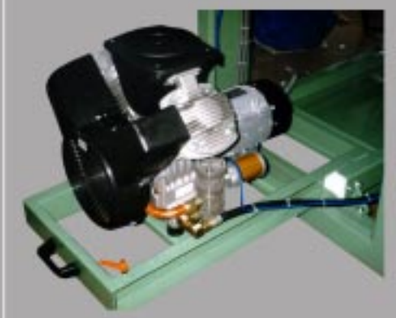

COMPRESSOR (optional)

GLUE PROGRAMMER NT11
8/30 boxes in memory

BLANKS FEEDER

CONTROL PANEL

MB-S

MACHINE FOR FORMING AND GLUING CORRUGATED BOARD OPEN TOP TRAYS

MB-S

AUTOMATIC AND ADJUSTABLE MACHINE FOR GLUING AND FORMING STANDARD OPEN TOP TRAYS IN CORRUGATED CARTON.

TABLE OF MODELS

MB-S	- Nordson 3800 / 25 kgs. - Side step for glue tank access.	- Nordson 3700 / 14 kgs.	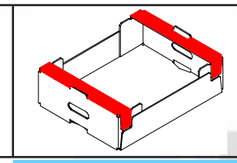	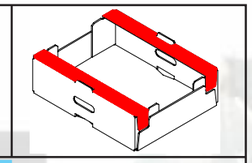
A				
B				
SA				
SB				

TECHNICAL SPECIFICATIONS	A	B	SA	SB
OPERATION	Mechanic, pneumatic and electric			
GLUE SYSTEM	By injection, hotmelt Nordson			
PRODUCTION	2 speeds of 1.300 and 1.700 boxes/hour			
TOTAL POWER	9 Kw.	7 Kw.	9 Kw.	7 Kw.
ELECTRICAL SUPPLY STANDARD	380 v. (3P + N + E) - 60 Hz			
NET WEIGHT - kg.	1.750	1.580	1.950	1.780
BLANK FEEDING SYSTEM	By vacuum			
SIZE CHANGE	15 – 30 min.			
DESIGN CHANGE	30 – 60 min.			
AIR CONSUMPTION - l/min.	285			
WORKING AIR PRESSURE	6 bar			
GLUE CAPACITY - Kg	25	14	25	14

FURTHER INFORMATION :

- Robust, easily operated, low maintenance and highly reliable machine.
- Incorporates various systems of auto-control to ensure a perfect gluing of the box.
- Option of working in line where the machine produces boxes in function of the requirements of the line.
- Central oil pump for ease of maintenance.

DIMENSIONS (mm):

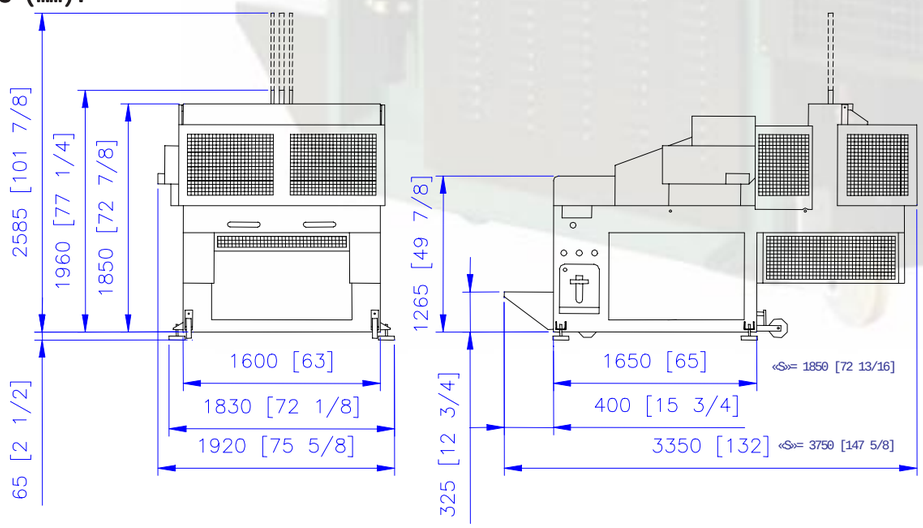

TOTAL LENGTHS WITH STACKERS; for models «S» + 400 mm. 15''3/4

AMP	è	L = 5.600 mm. 220''7/16	**AMP/R**	è	L = 5.600 mm. 220''7/16
AMB	è	L = 6.120 mm. 240''15/16	**ACR**	è	L = 6.570 mm. 258''5/8

BOX EXAMPLES

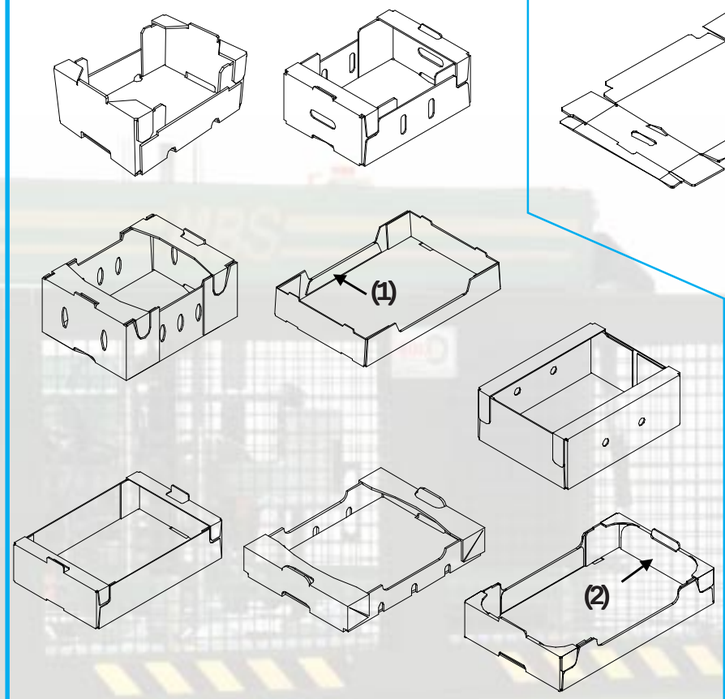

FORMING SEQUENCE

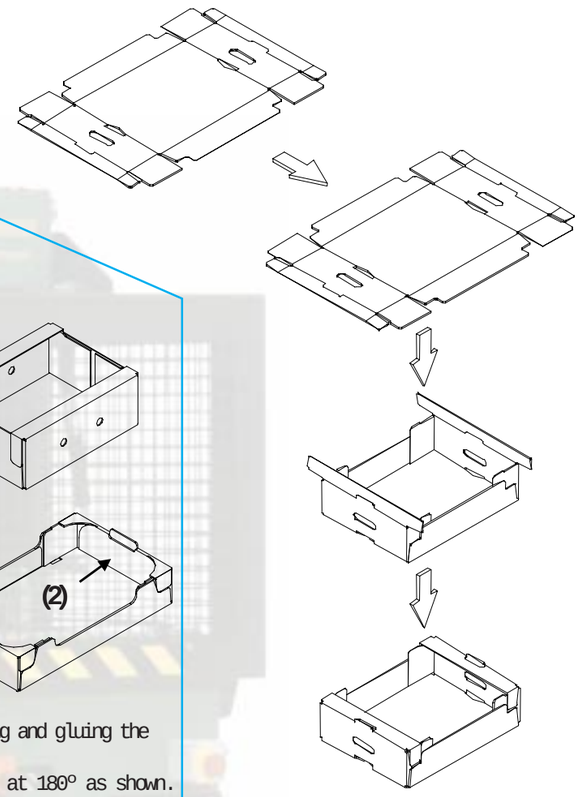

(1) Box formed using optional double wall kit for folding and gluing the indicated flap.
(2) The standard machine can also fold and glue flaps at 180º as shown.

MAXIMUM AND MINIMUM SIZES
mm [inches]

MEASUREMENTS NOT RELATED.

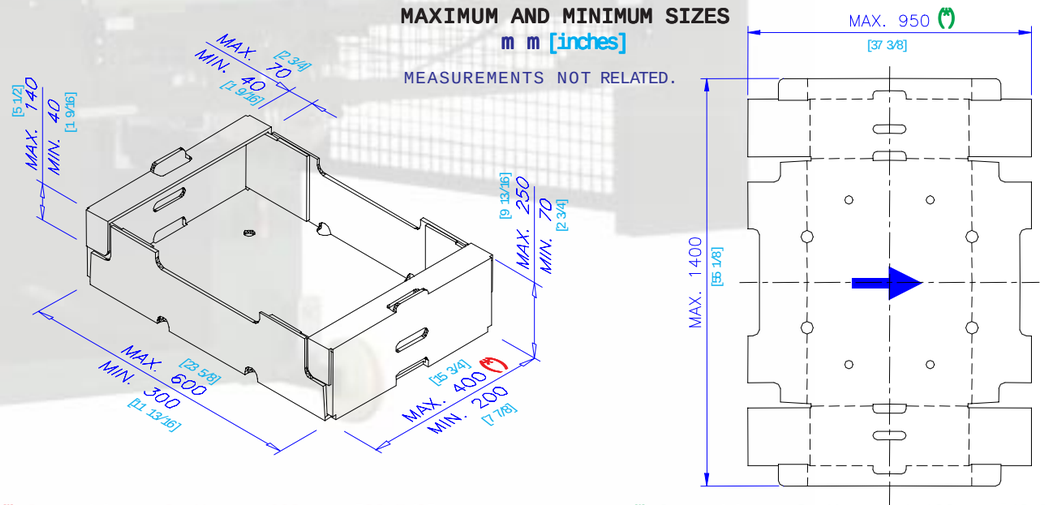

(*) On machines «S» Max. = 600 mm. [23 5/8]

(**) On machines «S» Max. = 1.100 mm.[43 5/16]

TABLE OF OPTIONS; STACKERS AND COMPRESSOR

AMP	AMB	AMP/R	ACR	KAESER
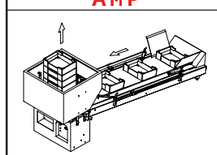	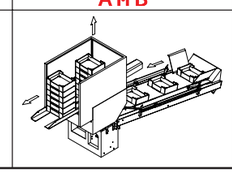	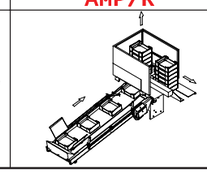	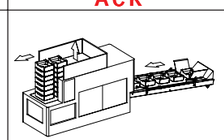	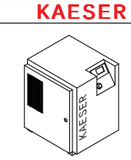 SIGMA CONTROL 5.5 Hp